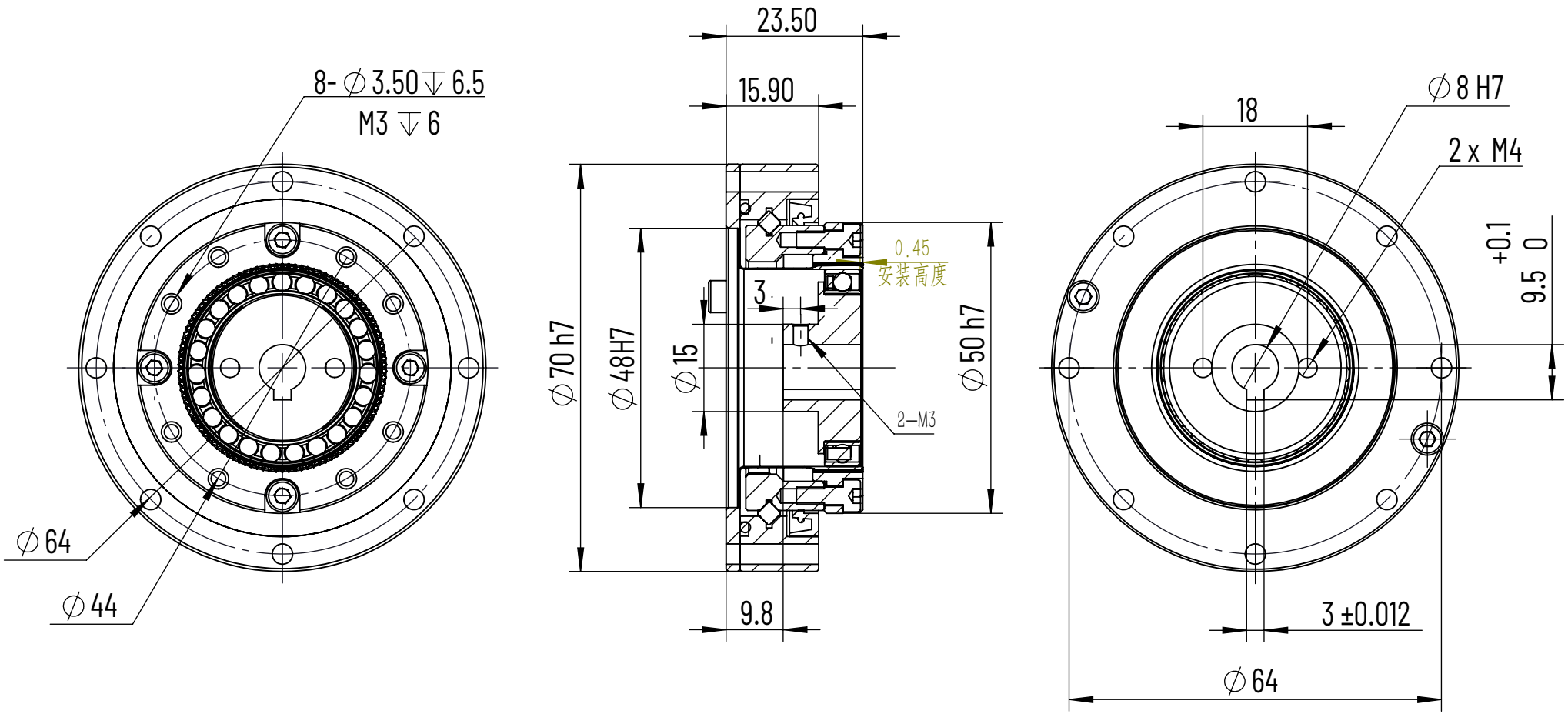
8- ∅3.50 ↧ 6.5
M3 ↧ 6
∅64
∅44
23.50
15.90
∅70 h7
∅48H7
∅15
3
0.45
安装高度
2—M3
∅50 h7
9.8
18
∅8 H7
2 x M4
9.5 +0.1 0
3 ±0.012
∅64

HS—14—III—XXX